WULI AGRICULTURE MACHINE CO.,LTD.
www.wulipump.com | E-mail: sales@wuli.com.tw
Tel: +886-4-23303108~10 | Fax: +886-4-23339530
No. 449 Gem-Chou Rd.,Wufeng Dist,Taichung City, 41350, Taiwan, R.O.C.

2021.12

WULI

WULI AGRICULTURE MACHINE CO., LTD.

PROFESSIONAL DESIGN AND MANUFACTURE OF INDUSTRIAL PUMPS

HIGH PRESSURE COOLANT SYSTEMS

The pump does not require oil-water proportion.

WULI AGRICULTURE MACHINE CO.,LTD.

PROFESSIONAL DESIGN AND MANUFACTURE OF INDUSTRIAL PUMPS

Established in 1973, Wuli is Taiwan's leading manufacturer of plunger pumps. The company's focus on innovation and high precision has made the "WULI" brand well-known around the world.

The company is ISO-9001 certified, with many products having additional safety certifications such as CE (Europe) and PSE (Japan).

Wuli's integration of research, production, mass manufacturing and marketing have earned them the Taiwan Small & Medium Enterprises Innovation Award by Taiwan's Ministry of Economic Affairs.

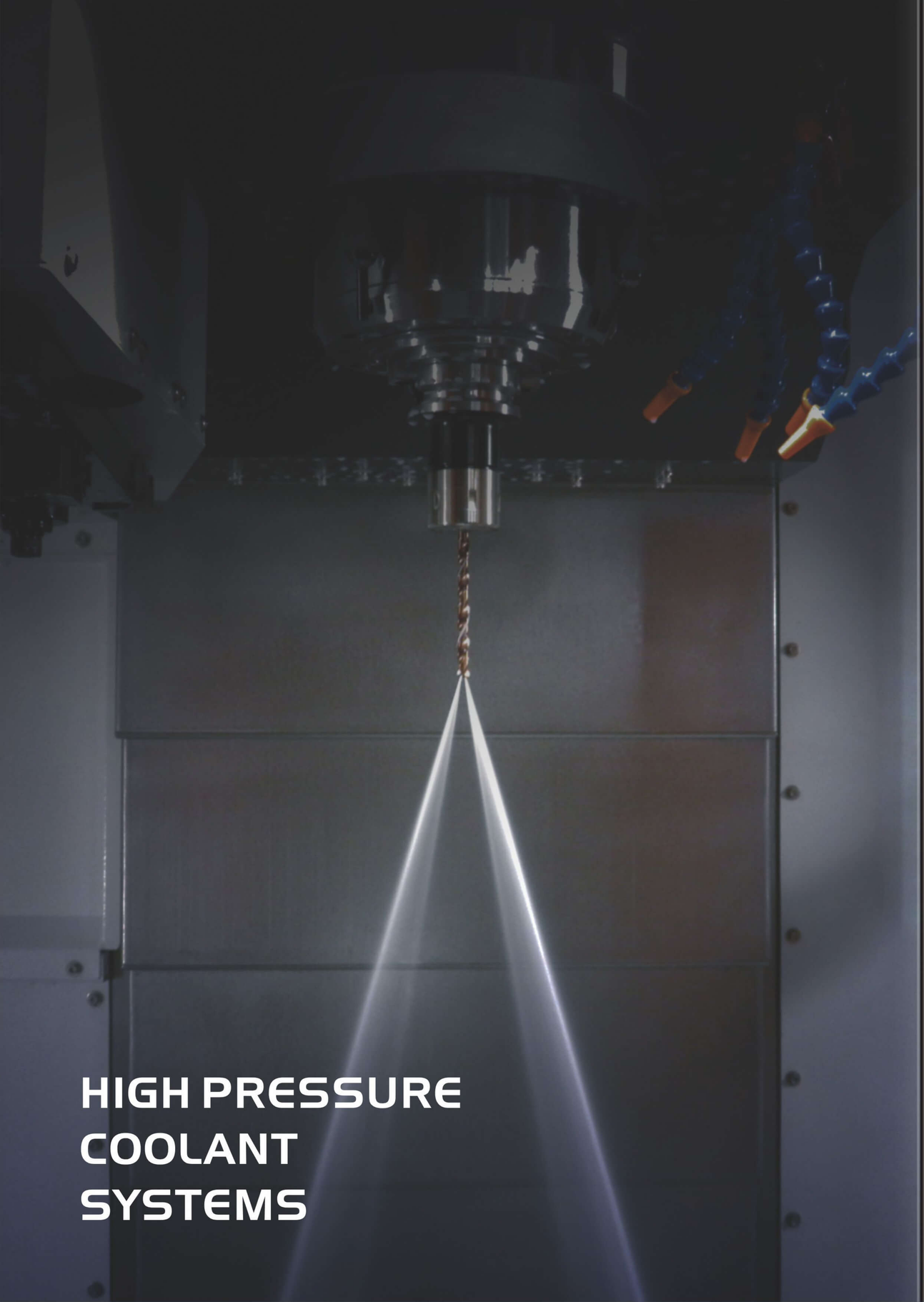

HIGH PRESSURE COOLANT SYSTEMS

WBP-2030M

WB-2030MF

WB-1830M

WB-1020M

Two-in-one compact design

Perfect combination of coolant system and filtration system

Control Panel Screen

Pump

- The pump is designed to have low vibration and noise below 80 decibels.
- Pumps of high quality and excellent performance are 100% made in Taiwan.
- Industrial ceramic plungers and special packing design are easy to maintain and have a longer service life.
- Plunger pump provides stable pressure and water volume, regardless of the ratio of water-based cutting fluid or cutting oil.

Electronic Control System

- Variable-frequency motor control system saves energy.
- Automatically detect and prompt that the filter paper is insufficient when the machine is turned on.
- Multi-knife pressure option control can change the water pressure of knives at will.
- Multi-channel option allows users to choose 1, 2, 3 or 4 outlet channels as needed.
- Large 7″ control panel screen and simplified control system make it easy for users to operate. Users can control the outlet channel by M code.
- The system will automatically stop to protect the pump from dry run.
- No dripping nozzles: the special hose design prevents nozzles from dripping when the user replaces the finished workpiece with the unfinished one, so that the machining environment is kept clean.
- The pump's outlet volume automatically changes with the knife's orifice and no overflow to the oil drum, which effectively reduces the temperature rise of the cutting fluid and improves the machining accuracy.
- When changing knife by M code, the system will automatically release the pressure to prevent inaccurate positioning due to residual pressure.

Coolant Filtration System

- This cutting fluid filtration system improves workpiece machining accuracy.
- The drum design only takes up ½ space than the flat design.
- For different cutting fluids and workpieces, filter paper can be selected from 15μ, 30μ, 50μ.
- For inlet, please choose a pump with working pressure below 1.5kgf/cm² and suction volume between 70L and 90L/Min.
- Precipitation filtration method increases the sedimentation time of chips and effectively reduces the consumption of filter paper.
- It can effectively separate chips in the cutting fluid, which keeps the fluid clean and prolongs the frequency of cutting fluid replacement.
- The electronic level sensor accurately detects the water level, reducing the chances of overflow or insufficient fluid.

VARIABLE-FREQUENCY
HIGH PRESSURE COOLANT SYSTEMS
www.wulipump.com

Dimensions (mm)

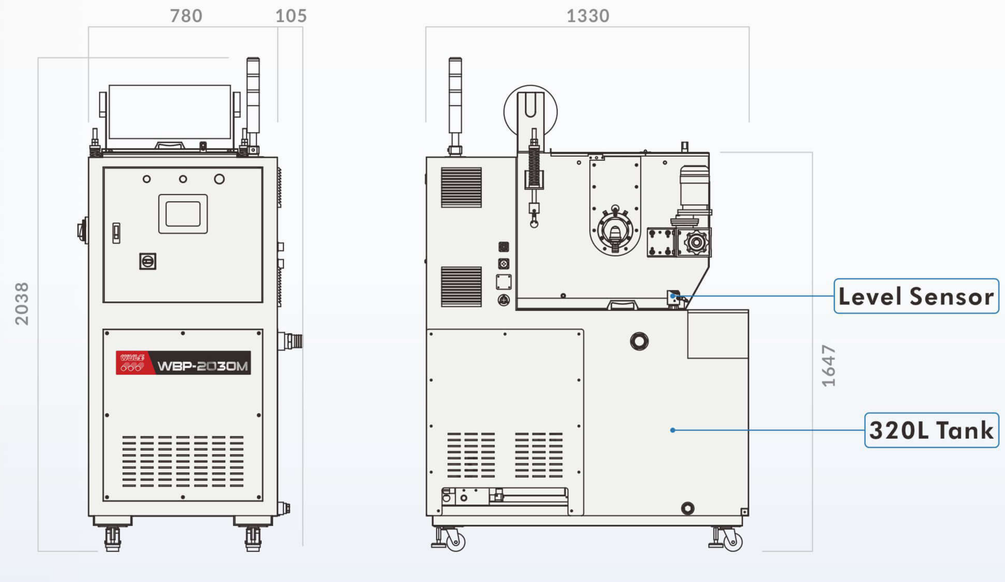

Horsepower Curve

Horsepower comparison of different flow rates of 70 bar working pressure

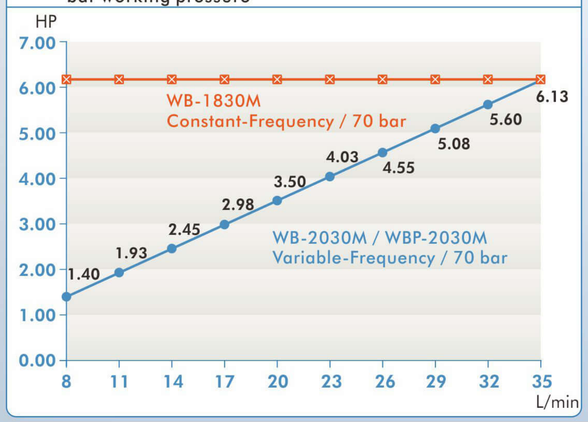

Electricity Fee Comparison

Work 10 hours a day, USD 0.133 per kWh

Working Pressure bar	Outlet Volume ℓ/min	Model No.	Horsepower HP	Calculation / Electricity fee per year (1 set)
70	8 2mm Nozzle	**WBP-2030M WB-2030M** Variable-Frequency	1.4	1.1kW x 10hr x $0.133 x 30days x 12 months USD **527**
		WB-1830M	6.1	4.6kW x 10hr x $0.133 x 30days x 12 months USD **2,202**
	8 x 2 2mm Nozzle x2	**WBP-2030M WB-2030M** Variable-Frequency	2.8	2.1kW x 10hr x $0.133 x 30days x 12 months USD **1,005**
		WB-1830M	6.1	4.6kW x 10hr x $0.133 x 30days x 12 months USD **2,202**

※ Utilities savings based on Taiwan electricity rates.

Model	Working Pressure	Suction Volume	Motor			
	Kgf/cm²	ℓ/min	HP	Φ	Volt	Hz
WBP-2030M	70	34	7.5	3	220	60
WBP-2040M	70	41	7.5	3	220	60
WBP-2230M	140	34	15	3	220	60
WBP-2240M	140	41	15	3	220	60

※ 1.Filter paper rolls of 15μ, 30μ or 50μ are available; standard equipped with 15μ. 2. Voltage and frequency can be customized.

Control Panel Screen

Pump

- The pump design has low vibration and low noise.
- Pumps of high quality and excellent performance are 100% made in Taiwan.
- Industrial ceramic plungers and special packing design are easy to maintain and have a longer service life.
- No auxiliary water tank design, which is easy to install. (Tool machine water tank capacity must be larger than 3 times the selected model.)
- Plunger pump provides stable pressure and water volume, regardless of the ratio of water-based cutting fluid or cutting oil.

Electronic Control System

- Variable-frequency motor control system saves energy.
- Multi-knife pressure option control can change the water pressure of knives at will.
- Multi-channel option allows users to choose 1, 2, 3 or 4 outlet channels as needed.
- Large 7″ control panel screen and simplified control system make it easy for users to operate. Users can control the outlet channel by M code.
- The system will automatically stop to protect the pump from dry run.
- The Intelligent Detection System sends out warnings when there is filter failure or no water supply, and will alert users when the filter needs to be replaced.
- No dripping nozzles: the special hose design prevents nozzles from dripping when the user replaces the finished workpiece with the unfinished one, so that the machining environment is kept clean.
- The pump's outlet volume automatically changes with the knife's orifice and no overflow to the oil drum, which effectively reduces the temperature rise of the cutting fluid and improves the machining accuracy.
- When changing knife by M code, the system will automatically release the pressure to prevent inaccurate positioning due to residual pressure.

Cooling System

- Air-cooled oil cooling system solves the problem of rising cutting fluid temperature and prevents inaccurate processing resulting from different temperatures of the cutting fluid.
- If precise oil temperature is required, this system can reduce the needed refrigeration to save energy.
- Air-cooled fan overcomes the difficulty of cooling the oil cutting fluid.
- For oil cutting fluid only.

Dimensions (mm)

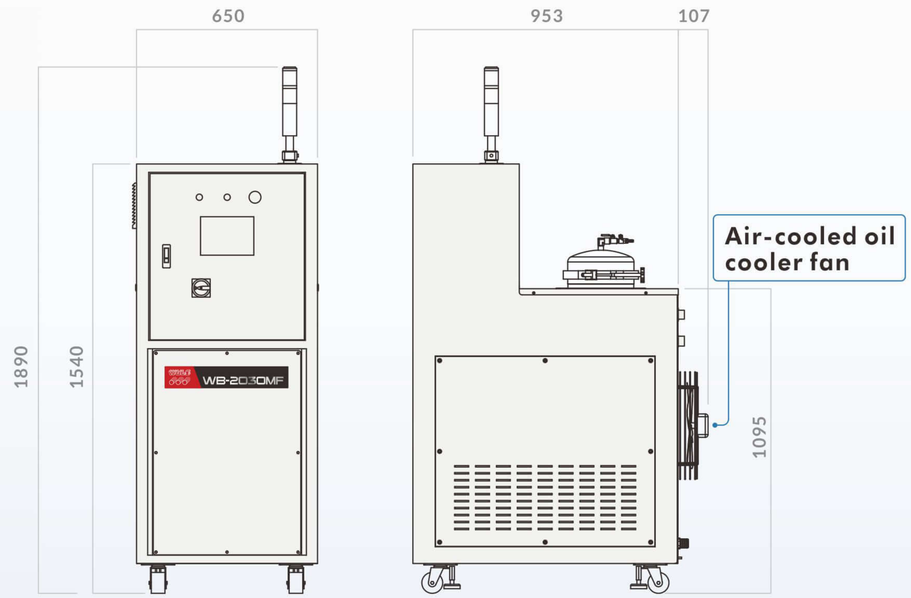

Horsepower Curve

Horsepower comparison of different flow rates of 70 bar working pressure

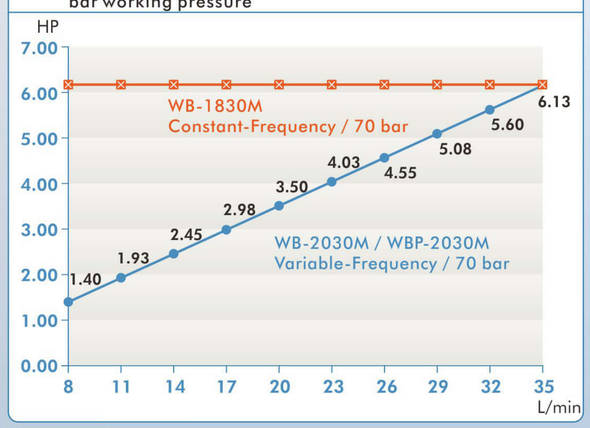

Electricity Fee Comparison

Work 10 hours a day, USD 0.133 per kWh

Working Pressure bar	Outlet Volume ℓ/min	Model No.	Horsepower HP	Calculation / Electricity fee per year (1 set)
70	8 2mm Nozzle	**WBP-2030M WB-2030M** Variable-Frequency	1.4	1.1kW x 10hr x $0.133 x 30days x 12 months USD **527**
		WB-1830M	6.1	4.6kW x 10hr x $0.133 x 30days x 12 months USD **2,202**
	8 x 2 2mm Nozzle x2	**WBP-2030M WB-2030M** Variable-Frequency	2.8	2.1kW x 10hr x $0.133 x 30days x 12 months USD **1,005**
		WB-1830M	6.1	4.6kW x 10hr x $0.133 x 30days x 12 months USD **2,202**

※ Utilities savings based on Taiwan electricity rates.

Model	Working Pressure	Suction Volume	Motor			
	Kgf/cm²	ℓ/min	HP	Φ	Volt	Hz
WB-2030MF	70	34	7.5	3	220	60
WB-2040MF	70	41	7.5	3	220	60

※1).Filter meshes of 5μ, 25μ or 50μ are available; standard equipped with 5μ. 2). Voltage and frequency can be customized.

Control Panel Screen

Pump

- The pump design has low vibration and low noise.
- Pumps of high quality and excellent performance are 100% made in Taiwan.
- Industrial ceramic plungers and special packing design are easy to maintain and have a longer service life.
- No auxiliary water tank design, which is easy to install. (Tool machine water tank capacity must be larger than 3 times the selected model.)
- Plunger pump provides stable pressure and water volume, regardless of the ratio of water-based cutting fluid or cutting oil.

Electronic Control System

- Variable-frequency motor control system saves energy.
- Multi-knife pressure option control can change the water pressure of knives at will.
- Multi-channel option allows users to choose 1, 2, 3 or 4 outlet channels as needed.
- Large 7" control panel screen and simplified control system make it easy for users to operate. Users can control the outlet channel by M code.
- The system will automatically stop to protect the pump from dry run.
- The Intelligent Detection System sends out warnings when there is filter failure or no water supply, and will alert users when the filter needs to be replaced.
- No dripping nozzles: the special hose design prevents nozzles from dripping when the user replaces the finished workpiece with the unfinished one, so that the machining environment is kept clean.
- The pump's outlet volume automatically changes with the knife's orifice and no overflow to the oil drum, which effectively reduces the temperature rise of the cutting fluid and improves the machining accuracy.
- When changing knife by M code, the system will automatically release the pressure to prevent inaccurate positioning due to residual pressure.

VARIABLE-FREQUENCY
HIGH PRESSURE COOLANT SYSTEMS
www.wulipump.com

Dimensions (mm)

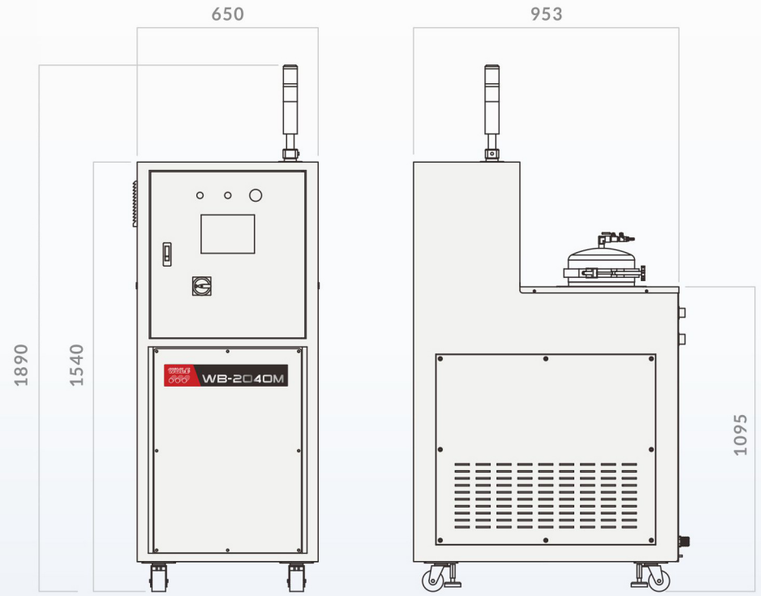

Horsepower Curve

Horsepower comparison of different flow rates of 70 bar working pressure

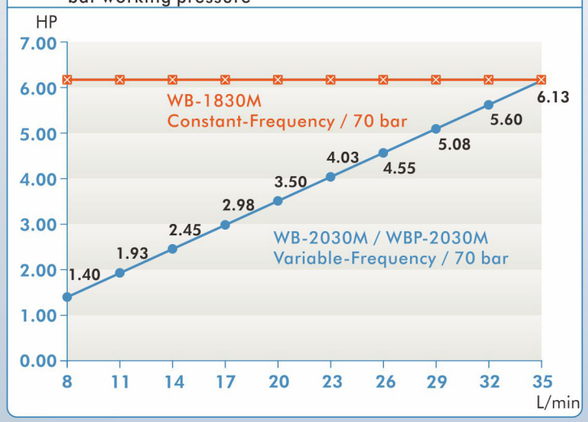

Electricity Fee Comparison

Work 10 hours a day, USD 0.133 per kWh

Working Pressure bar	Outlet Volume ℓ/min	Model No.	Horsepower HP	Calculation / Electricity fee per year (1 set)
70	8 2mm Nozzle	**WBP-2030M WB-2030M** Variable-Frequency	1.4	1.1kW x 10hr x $0.133 x 30days x 12 months USD **527**
		WB-1830M	6.1	4.6kW x 10hr x $0.133 x 30days x 12 months USD **2,202**
	8 x 2 2mm Nozzle x2	**WBP-2030M WB-2030M** Variable-Frequency	2.8	2.1kW x 10hr x $0.133 x 30days x 12 months USD **1,005**
		WB-1830M	6.1	4.6kW x 10hr x $0.133 x 30days x 12 months USD **2,202**

※ Utilities savings based on Taiwan electricity rates.

Model	Working Pressure	Suction Volume	Motor			
	Kgf/cm²	ℓ/min	HP	Φ	Volt	Hz
WB-2030M	70	34	7.5	3	220	60
WB-2040M	70	41	7.5	3	220	60
WB-2230M	140	34	15	3	220	60
WB-2240M	140	41	15	3	220	60

※1).Filter meshes of 5μ, 25μ or 50μ are available; standard equipped with 5μ. 2). Voltage and frequency can be customized.

Dimensions (mm)

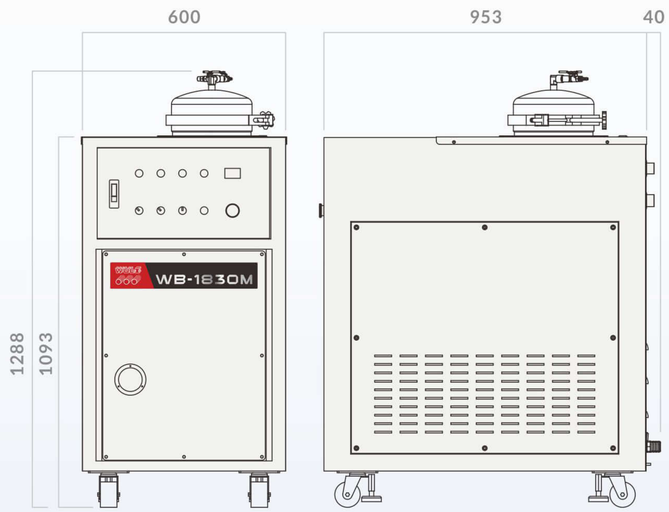

Pump

- The pump and motor use belt-driven design with low vibration and low noise
- Pumps of high quality and excellent performance are 100% made in Taiwan.
- Industrial ceramic plunger and special packing design are easy to maintain and have a longer service life.
- No auxiliary water tank design, which is easy to install. (Tool machine water tank capacity must be larger than 3 times the selected model.)
- Plunger pump provides stable pressure and water volume, regardless of the ratio of water-based cutting fluid or cutting oil.

Electronic Control System

- When changing knife by M code, the system will automatically release the pressure to prevent inaccurate positioning due to residual pressure.
- Multi-channel option allows users to choose 1 or 2 outlet channels as needed.
- The filter detection system sends out warnings when there is filter failure or no water supply, and will alert users when the filter needs to be replaced.
- No dripping nozzles: the special hose design prevents nozzles from dripping when the user replaces the finished workpiece with the unfinished one, so that the machining environment is kept clean.

Model	Working Pressure	Suction Volume	Motor			
	Kgf/cm²	ℓ/min	HP	Φ	Volt	Hz
WB-1830M	70	34	7.5	3	220	60
WB-1840M	70	41	7.5	3	220	60

※1).Filter meshes of 5μ, 25μ or 50μ are available; standard equipped with 5μ. 2). Voltage and frequency can be customized.

HIGH PRESSURE
COOLANT SYSTEMS
www.wulipump.com

Dimensions (mm)

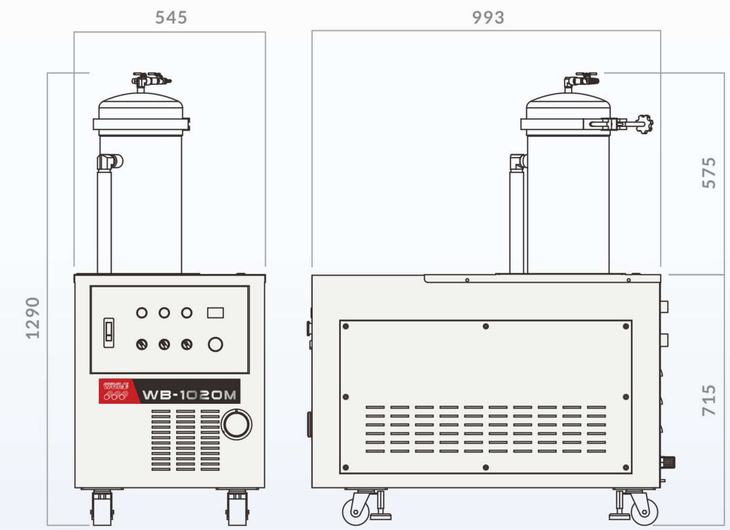

Pump

- Direct-drive design between pump and motor eliminates the need to adjust belts and simplifies maintenance and repair.
- Pumps of good quality and excellent performance are 100% made in Taiwan.
- Industrial ceramic plunger and special packing design are easy to maintain and have a longer service life.
- No auxiliary water tank design, which is easy to install. (Tool machine water tank capacity must be larger than 3 times the selected model.)
- Plunger pump provides stable pressure and water volume, regardless of the ratio of water-based cutting fluid or cutting oil.

Electronic Control System

- When changing knife by M code, the system will automatically release the pressure to prevent inaccurate positioning due to residual pressure.
- The filter detection system sends out warnings when there is filter failure or no water supply, and will tell users when the filter needs to be replaced.
- No dripping nozzles: the special hose design prevents nozzles from dripping when the user replaces the finished workpiece with the unfinished one, so that the machining environment is kept clean.

Model	Working Pressure	Suction Volume	Motor			
	Kgf/cm²	ℓ/min	HP	Φ	Volt	Hz
WB-1020M	20	23.5	2	3	220	60
WB-1223M	70	22	4	3	220	60

※1).Filter meshes of 5μ, 25μ or 50μ are available; standard equipped with 5μ. 2). Voltage and frequency can be customized.

ACCESSORIES

B-01 / No. 2 Filter Mesh
Specification: 5μm、25μm、50μm

B-02 / Oil Filter Cartridge (Inlet)
Specification: PT1-1/2"

B-03 / Filter Cartridge
(The second stage filter cartridge)
Specification: Φ70x195L

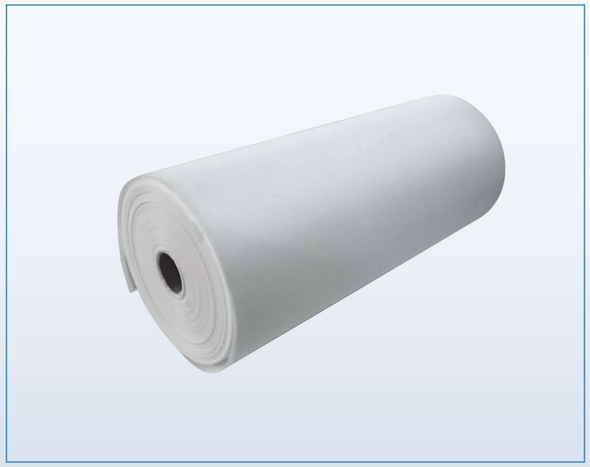

B-04 / Filter Paper Roll
Specification: 15μm、30μm、50μm