物理農業機械股份有限公司

WULI AGRICULTURE MACHINE CO., LTD.

動力噴霧機、高壓洗淨機、微霧系統專業設計製造

高壓泵浦操作手冊

HIGH PRESSURE PUMP OPERATION MANUAL

MODEL

WH-2075



感謝您購買物理產品，使用前請詳閱本說明。
Thank you for choosing our product.
Please read the manual before use.

2026.10V

安全須知 Safety Instructions

使用前請檢查機油。
Check the pump oil level before each use.

請放置於乾燥之場所，避免機器銹蝕，影響產品使用壽命。
To reduce the risk of rust and prolong the life of product, please place the pump in a dry area.

泵浦運轉後溫度會上升，請勿直接碰觸機械表面。
To reduce the risk of burns, do not touch the surface of the pump while operating.

請做好安全防護措施，避免操作運轉時，人員誤觸受傷。
For safety concerns, please keep off the machine while operating.

勿將噴水口直接對準機器、電器、人員或動物。
Do not aim the spray gun at people, animals or any electrical device.

泵浦搭配引擎、馬達運轉時，在任何檢修保養時，請先關閉，避免危險。
Please completely shut down the unit during maintenance.

本機器必須配合水一同操作使用，缺水將造成機器嚴重損壞。
The unit must not be run without water. Lack of water will cause serious damage to the pump.

請勿讓兒童使用本機器，使用時請注意兒童安全。
Do not operate the machine near children or animals.

勿在雨天及雷雨中操作。使用時，勿覆蓋物體以避免危險。
Do not operate the unit in the rain or during thunderstorms. When the unit is working, do not cover it or place it in a closed space with poor ventilation.

泵浦搭配馬達運轉，須注意電壓是否正確，並使用獨立電源，並加裝漏電開關。
Please check whether the voltage is correct and use GFCI plug.

外觀結構 Pump Overview

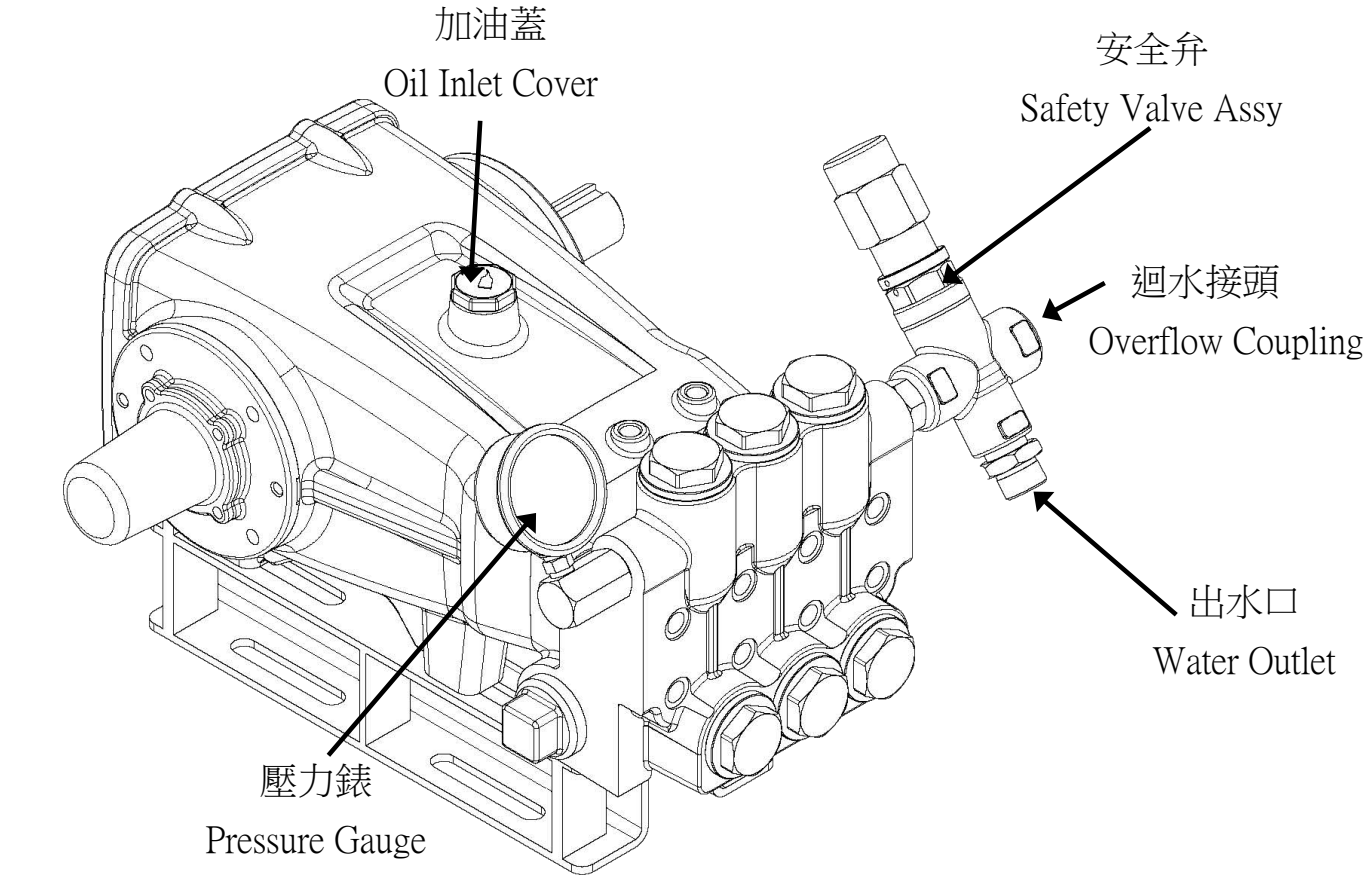

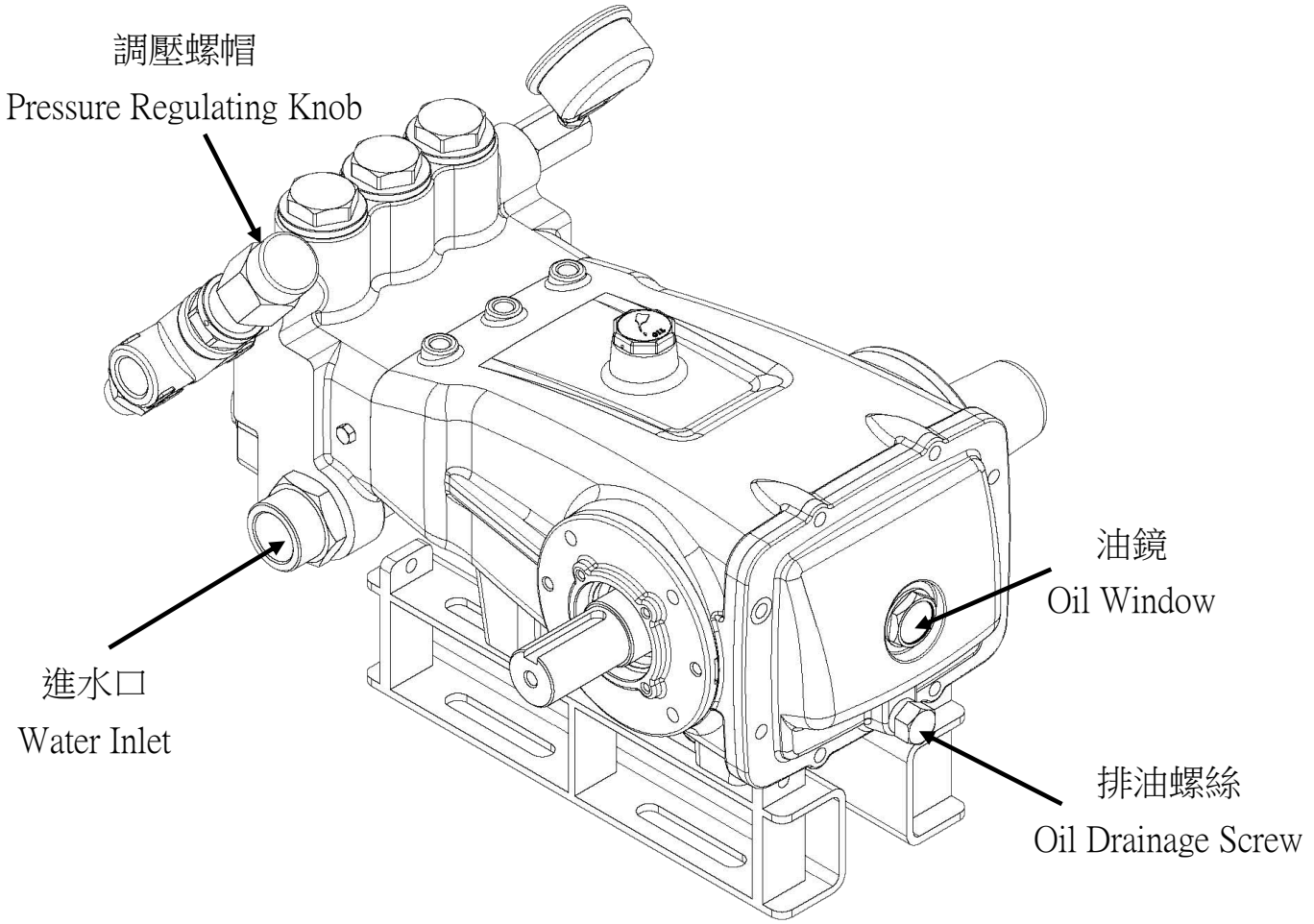

使用說明

一、 操作說明

1. 檢查泵浦與馬達/引擎的每個扣件，是否穩固的鎖緊於架上。
2. 將吸水管接於泵浦進水口鎖緊，並將高壓管接於出水口。
3. 將吸水管(網)放入蓄水槽內並保持水管暢通。吸水過濾網需放置水槽底部上方 20 公分處，預防吸進底部泥沙，確保泵浦壽命，吸水管給水量需大於泵浦使用水量，如此才能達到使用壓力。
4. 檢查馬達電源是否配接正確電壓；引擎燃料是否正確、充足。
5. 初次啟動泵浦後，請先將泵浦內空氣排出後，停止泵浦。
6. 壓力調整:調整時請依照壓力錶顯示之壓力為參考值，壓力調整弁加壓以順時針方向調整;反之，以逆時針方向調整。調整壓力時需要打開噴槍;最高壓力不得高於泵浦設定之壓力，以維護機器壽命。
7. 使用完時，請先關閉動力來源(馬達/引擎)再作動噴槍一次，避免壓力蓄存於高壓管中。

二、 泵浦的潤滑

1. 更換機油時，請將泵浦停止作動，並注意油溫，請冷卻後再進行更換。
2. 初次使用 100 小時應更換機油，以後每使用 300 小時應更換一次。
3. 更換機油時，請旋開洩油螺絲排出骯髒的機油。
4. 將洩油螺絲鎖緊後，打開加油蓋注入#30~#40 之車輛用重型機油，機油應保持在油鏡 2/3 的位置。

三、 特別注意事項

1. 使用自來水作為泵浦的水源。
2. 馬達電源線若要延長時，請依馬力值所需大小法規延長。
3. 確實的更換機油以保持泵浦的潤滑，降低機械損耗。
4. 泵浦與吸水網之高度差(揚程)請勿超過 1.3 公尺。
5. 水溫請勿超過攝氏 60 度。
6. 若使用的水源加入藥劑、肥皂或其他物質，請在使用完畢後以清水沖洗泵浦內部一分鐘，以延長泵浦的使用壽命。
7. 泵浦的轉速/壓力不得超出建議轉速/壓力的最高值。
8. 請確定馬達/引擎的動力可以配合泵浦。

Operation Instructions

A. Operating Instructions

1. Check every fastener to make sure that the pump and engine/motor are installed firmly onto the frame.
2. Connect the suction hose to the Water Inlet of the pump and secure the hose; connect the high pressure hose to the Water Outlet.
3. Put the suction hose (with filter) into the water tank and make sure that water flows smoothly. Please suspend the suction filter around 20cm above the bottom of the water tank to avoid suctioning residue which might reduce the product's life.
4. Check if the motor is connected to the right voltage; check if the engine fuel is suitable and sufficient.
5. Always release air from the pump when first starting it.
6. Pressure adjustment:
   - ◇Check the pressure displayed on Pressure Gauge for reference when adjusting it.
   - ◇The maximum pressure should not exceed the pump's working pressure.
   - ◇Hold the spray gun trigger when adjusting the pressure.
   - ◇Turn the knob clockwise to increase pressure; counterclockwise decrease.
7. When finished using the pump, turn off the power of motor or engine and squeeze the spray gun trigger again to release the pressure stored in the high pressure hose.

B. Oil Change

1. Replace the oil in the pump after the first 100 hours of use. After this, the oil should be changed after every 300 hours of use.
2. Unscrew the Oil Drainage Screw and drain the oil from the pump.
3. Tighten the Oil Drainage Screw before refilling with clean motor oil SAE #30~#40 up to the level of 2/3 of the Oil Window.

※Attention: When replacing the oil, please turn off the product and make sure that the oil temperature has cooled before replacing.

C. Reminders

1. Always use clean water with the product.
2. If using an extension cord, please follow the electrical regulations and select the appropriate power cord diameter.
3. Be sure to change the oil according to the Oil Change section or the pump might be damaged.
4. The pump's location should be no more than 1.3 meters higher than the suction filter.
5. The water temperature should not exceed 60℃.
6. If using water containing chemicals, detergents or other substances, please run the pump with clean water for one minute after use to prolong its service life.
7. The pump's revolution and working pressure should not exceed the maximum suggested values.
8. Please make sure the motor or engine power is suitable for the pump.

故障診斷與排除

以下提供簡易的故障排除方式，若有任何問題，請您向當地之經銷商洽詢，同時記得提供您所購買的**機器型號**與**製造編號**。

故障的現象	原　　因	解決方式
無法吸水/出水	◎泵浦內部損壞或阻塞 ◎噴槍或噴嘴阻塞 ◎活門總成異物阻塞或磨損 ◎泵浦與水槽距離與高度超出範圍 ◎泵浦吸入空氣	◎清潔或維修泵浦，及清潔吸水過濾網 ◎清潔或維修噴槍/噴嘴 ◎清潔活門總成或更換零件 ◎改善水槽或泵浦位置，清洗機與吸水網之高度差(揚程)請勿超過 1.3 公尺 ◎拔掉噴槍，待出水正常後再接上
運轉聲音異常	◎引擎有問題 ◎泵浦吸入空氣 ◎活門總成異物阻塞 ◎吸水量不足	◎清潔或維修引擎 ◎打開出水管排氣 ◎清潔活門總成 ◎檢查吸水管是否有細縫，或者扭曲進氣及清潔吸水管過濾網
調壓問題或 壓力無法上升	◎壓力閥或閥座磨損 ◎迫緊磨損 ◎活門塞與活門座沾黏 ◎閥座上有異物 ◎活門總成磨損 ◎活門總成異物阻塞 ◎噴嘴磨損導致壓力下降 ◎泵浦吸入空氣 ◎安全弁損壞	◎更換零件 ◎更換零件 ◎拆解後清洗活門總成或更換零件 ◎清潔閥座 ◎更換零件 ◎清潔活門總成 ◎更換噴嘴 ◎檢查吸水管接頭鎖合或吸水管破裂 ◎送回經銷商更換

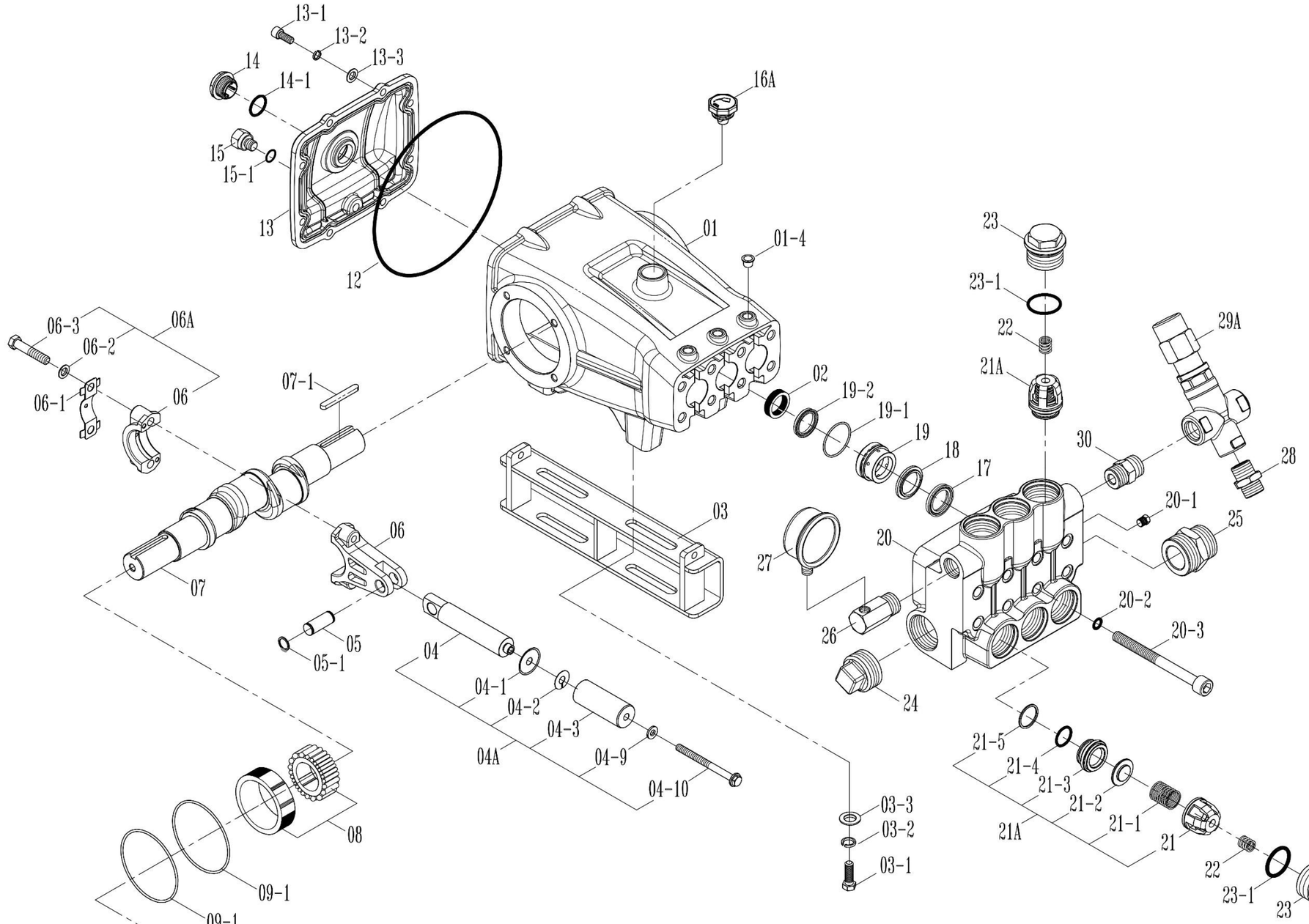
13-1
13-2
13-3
14
14-1
15
15-1
13
12
16A
01
01-4
23
23-1
22
21A
29A
30
28
02
19-2
19-1
19
18
17
20-1
25
20
27
20-2
20-3
26
24
06-3
06A
06-2
06-1
06
07-1
07
06
03
05
05-1
04
04-1
04-2
04-3
04A
04-9
04-10
03-3
03-2
03-1
21-5
21-4
21-3
21-2
21-1
21
22
23-1
23
08
09-1
09-1
09-4
09-3
09-2
09-5
11-2
11-3
11-1
09
10
11

WH-2075

零件表 Parts List

圖號 NO.	編號 CODE	名 稱	DESCRIPTION	Q'TY
01	B010122001	曲軸箱	CRANKCASE	1
01-4	B100519050	圓內塞頭 1/4"	PLUG 1/4"	3
02	B010222000	柱塞油封	PISTON OIL SEAL	3
03	B010322050	腳座	CRANKCASE STAND	2
03-1	BS11214030300	六角螺絲	HEX SCREW	4
03-2	BS32214300	彈簧華司	SPRING WASHER	4
03-3	BS31214201	平面華司	WASHER	4
04A	B013022003	柱塞組	PISTON ASSY	3
04	B013122151	柱塞桿	PISTON ROD	3
04-1	B013522151	柱塞套擋水墊圈	GASKET	3
04-2	B013522150	柱塞套透氣墊圈	GASKET	3
04-3	B013222050	柱塞套	CERAMIC PISTON SLEEVE	3
04-9	B015122150	止水墊片	GASKET	3
04-10	B013322150	柱塞套固定螺絲	PISTON SET SCREW	3
05	B010522000	柱塞銷	PISTON PIN	3
05-1	BS41015010	扣環	BUCKLE RING	6
06A	B010622002	連桿組	CONNECTING ROD ASSY	3
06-1	B014322000	螺絲防鬆片	LOCK WASHER	3
06-2	BS31210500	平面華司	WASHER	6
06-3	BS11210050500	六角螺絲	SCREW	6
07	B010822050	曲軸	CRANKSHAFT	1
07-1	B012122000	曲軸鍵	CRANKSHAFT KEY	1
08	B010722001	軸承	BEARING	2
09	B011022000	軸承油封蓋	CRANKSAHFT OIL SEAL COVER	2
09-1	BG10900095200	O 形環	O-RING	4
09-2	BS16208025300	內六角螺絲	SCREW	8

零件表 Parts List

圖號 NO.	編號 CODE	名 稱	DESCRIPTION	Q'TY
09-3	BS32208300	彈簧華司	SPRING WASHER	8
09-4	BS31208301	平面華司	WASHER	8
09-5	B012622050	軸承蓋平墊圈	SHIM	4
10	B010922000	曲軸油封	CRANKSHAFT OIL SEAL	2
11	B011122000	曲軸邊蓋	CRANKSHAFT COVER	1
11-1	BS16206016300	內六角螺絲	SCREW	4
11-2	BS32206300	彈簧華司	SPRING WASHER	4
11-3	BS31206310	平面華司	WASHER	4
12	BG12091216200	O 形環	O-RING	1
13	B011622000	曲軸箱後蓋	REAR COVER	1
13-1	BS16208025300	內六角螺絲	SCREW	8
13-2	BS32208300	彈簧華司	SPRING WASHER	8
13-3	BS31208306	平面華司	WASHER	8
14	B012201020	油鏡	OIL WINDOW	1
14-1	BG10234028700	O 形環	O-RING	1
15	B011823000	排油螺絲	DRAINAGE SCREW	1
15-1	BG10130019	O 形環	O-RING	1
16A	B011901014	加油蓋組	OIL INLET COVER ASSY	1
17	B020322050	U 迫緊	U-PACKING	3
18	B020322051	U 迫緊墊圈	U-PACKING SPACER	3
19	B021122050	迫緊上環	PACKING UPPER RING	3
19-1	BG10415045500	O 形環	O-RING	3
19-2	B021022050	防水油封	LOW PRSSURE SEAL	3
20	B020122050	汽缸	MANIFOLD	1
20-1	BS50004000	六角塞頭: PT1/8	HEX PLUG PT1/8	1
20-2	BS33212400	安全華司	SAFETY WASHER	8

零件表 Parts List

圖號 NO.	編號 CODE	名 稱	DESCRIPTION	Q'TY
20-3	BS16212130300	內六角螺絲	SCREW	8
21A	B040022050	活門組	VALVE ASSY	6
21	B040325000	活門帽	VALVE CAGE	1
21-1	BJ22501000	活門彈簧	VALVE SPRING	1
21-2	B040125000	活門塞	VALVE PLUG	1
21-3	B040222050	活門座	VALVE SEAT	1
21-4	BG10270032	O 形環	O-RING	1
21-5	BG30282032500	背托環	BACK-UP RING	1
22	BJ22501210	活門輔助彈簧	VALVE SPRING	6
23	B021322050	活門固定螺絲	VALVE BOLT	6
23-1	BG10377043040	O 形環	O-RING	6
24	BS50036000	塞頭: PT1-1/2	PLUG PT1-1/2	1
25	B021722050	進水接頭	INLET CONNECTOR	1
26	B031218010	壓力錶接頭	PRESSURE GAUGE CONNECTOR	1
27	B031109000	壓力錶	PRESSURE GAUGE	1
28	B220300201	過濾器接頭	FILTER CONNECTOR	1
***29A**	**B060022051**	**安全弁**	**SAFETY VALVE ASSY**	**1**
30	B023518000	安全弁接頭	SAFETY VALVE CONNECTOR	1
ACC.	B150101001	吸水管組 3/4"*9 尺	INLET HOSE ASSY 3/4"*9 FT	1
ACC.	B150103001	吸水管組 1-1/4"*10 尺	INLET HOSE ASSY 1-1/4"*10 FT	1
ACC.	B150903110	過濾網	FILTER	1
ACC.	B150603110	過濾網申目	FILTER SOCKET	1
ACC.	BP21823350	皮帶輪 10B3*35*10	PULLEY 10B3*35*10	1
ACC.	BS11112032121	皮帶輪螺絲	PULLEY SET BOLT	1
*29A 零件表及分解圖請參閱第 12~13 頁。			*29A spare parts list & diagram please refer to page 12~13.	

安全弁 展開圖 Safety Valve Diagram

B060022051

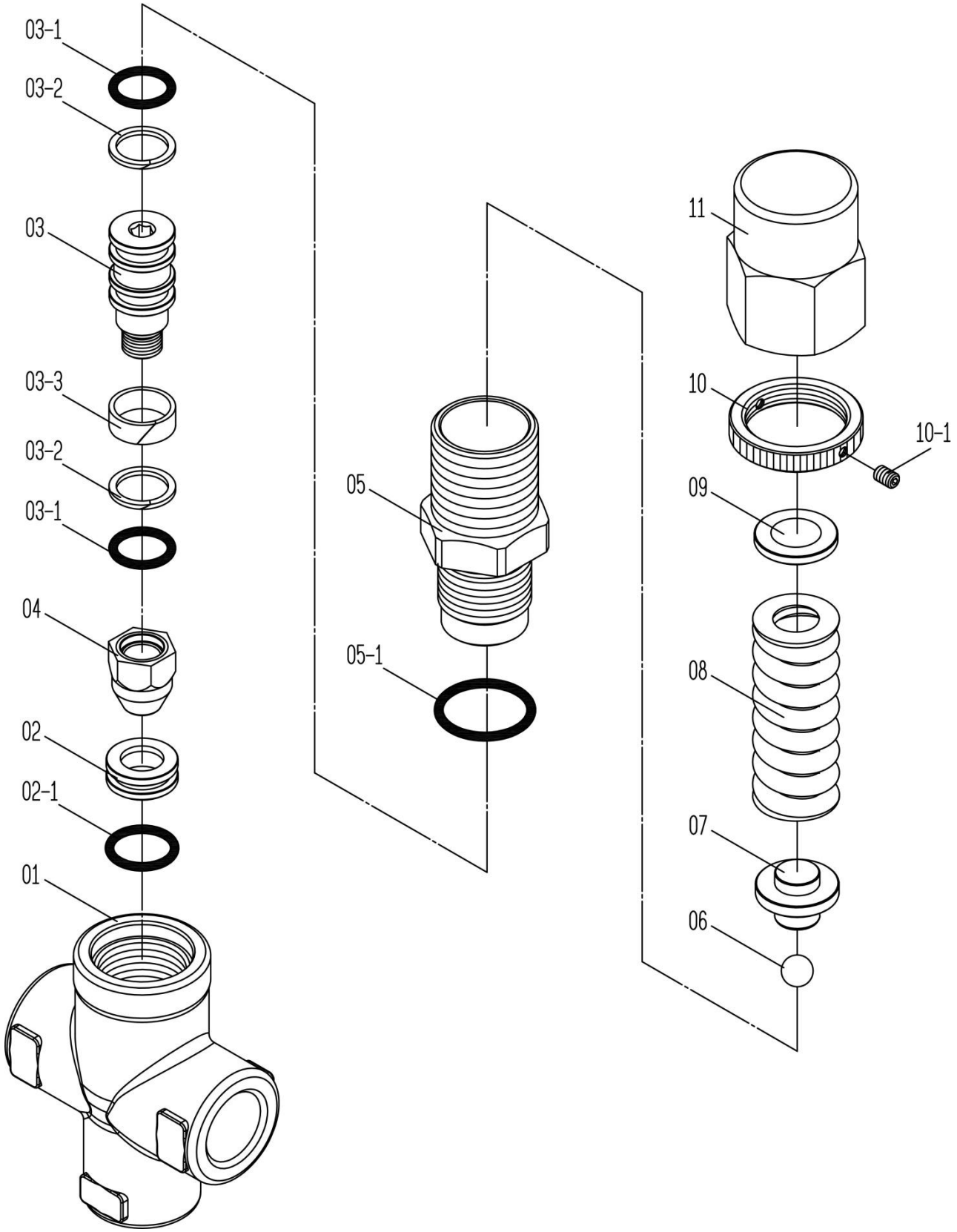

安全弁 零件表 Safety Valve Parts List

圖號 NO.	編號 CODE	名 稱	DESCRIPTION	Q'TY
01	B060122051	安全弁本體	SAFETY VALVE BODY	1
02	B060922050	壓力閥座	PRESSURE VALVE SEAT	1
02-1	BG10170022040	O 形環	O-RING	1
03	B061022050	壓力閥桿	PRESSURE VALVE ROD	1
03-1	BG10150020040	O 形環	O-RING	2
03-2	BG30156019900	背托環	BACK-UP RING	2
03-3	BG30169019900	閥桿耐磨環	VALVE ROD WEAR RING	1
04	B061222050	壓力閥套	PRESSURE VALVE SLEEVE	1
05	B062322050	安全弁接頭	SAFETY VALVE COUPLING	1
05-1	BG10250030300	O 形環	O-RING	1
06	B310115120	鋼珠	SST BALL	1
07	B061422050	彈簧下座	SPRING SEAT (LOWER)	1
08	BJ42201000	調壓彈簧	PRESSURE REGULATING SPRING	1
09	B061322050	彈簧上座	SPRING SEAT (UPPER)	1
10	B062522050	固定環	SET RING	1
10-1	BS17204006300	無頭內六角螺絲	SCREW	2
11	B062422050	調壓螺帽	PRESSURE REGULATING KNOB	1

Troubleshooting

The following are simple troubleshooting methods. If you have any questions, please contact your local dealer and remember to provide the model and serial number of the product you purchased.

Problem	Cause	Solution
The pump fails to deliver water	◎ The pump is blocked or damaged. ◎ The spray gun or nozzle is blocked. ◎ The valve assemblies are stuck or worn out. ◎ The distance or height between the pump and the water tank exceeds the limit. ◎ Air in the pump.	◎ Clean or maintain the pump and suction filter. ◎ Check and clean the spray gun and nozzle. ◎ Clean or replace the valve assemblies. ◎ Make sure the pump's location is no more than 1.3m higher than the suction filter. ◎ Disconnect the spray gun until the water flow is stable.
Unusual noise	◎ Engine problems. ◎ There is air in the pump. ◎ The valve assemblies are blocked. ◎ The water supply is not enough.	◎ Clean or maintain the engine. ◎ Disconnect the spray gun until the water flow is stable. ◎ Clean the valve assemblies. ◎ Check the suction hose and fittings; make sure they are well connected and in good condition. ◎ Clean the suction filter.

**** Continues on page 15 ****

Troubleshooting

Problem	Cause	Solution
Pressure adjustment problem	◎ The pressure valve or the pressure valve seat is worn out, damaged or blocked.	◎ Clean the pressure valve or replace the worn out or damaged spare parts.
	◎ The packings are worn out.	◎ Replace the packings.
	◎ The valve assemblies are worn out or blocked.	◎ Clean or replace the valve assemblies.
	◎ The pressure decreases due to nozzle wear.	◎ Replace the nozzle.
	◎ Air in the pump.	◎ Check the Suction Hose and fittings; make sure they are well connected and in good condition.
	◎ The Safety Valve Assembly is damaged.	◎ Return the product to your local dealer to repair or replace the safety Valve Assembly.