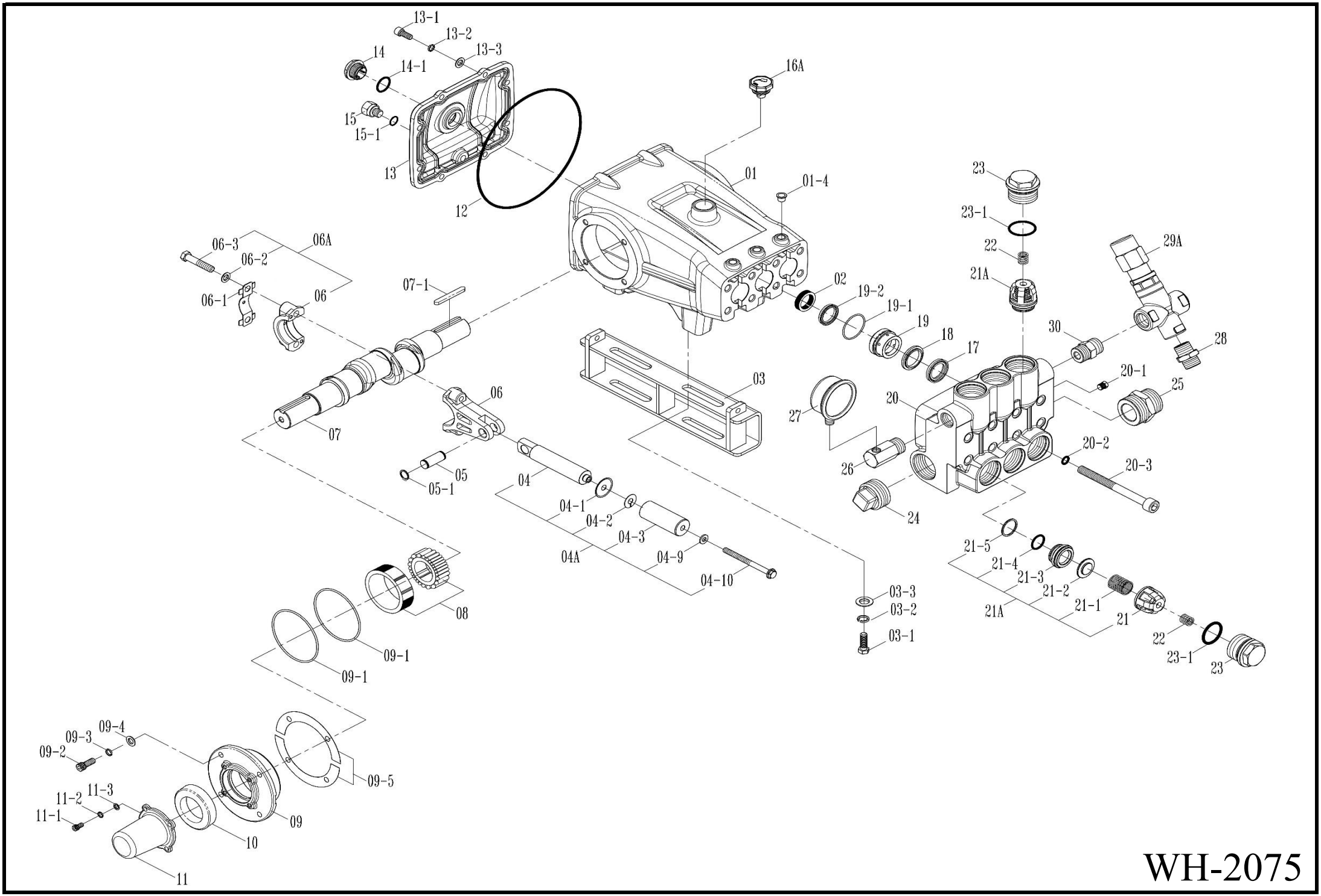
13-1
13-2
13-3
14
14-1
15
15-1
13
12
16A
01
01-4
23
23-1
22
21A
29A
28
30
20-1
25
06-3
06A
06-2
06-1
06
07-1
07
06
05
05-1
04
04-1
04-2
04-3
04A
04-9
04-10
03
02
19-2
19-1
19
18
17
27
20
26
24
20-2
20-3
03-3
03-2
03-1
21-5
21-4
21-3
21-2
21-1
21
21A
22
23-1
23
08
09-1
09-1
09-2
09-3
09-4
09-5
09
11-2
11-3
11-1
10
11

WH-2075

零件表PARTS LIST　WH-2075

圖號 NO.	編號 CODE	名　稱	DESCRIPTION	Q'TY		圖號 NO.	編號 CODE	名　稱	DESCRIPTION	Q'TY	
01	B010122001	曲軸箱	CRANKCASE	1		09-3	BS32208300	彈簧華司	SPRING WASHER	8	
01-4	B100519050	圓內塞頭 1/4"	PLUG 1/4"	3		09-4	BS31208301	平面華司	WASHER	8	
02	B010222000	柱塞油封	PISTON OIL SEAL	3		09-5	B012622050	軸承蓋平墊圈	SHIM	4	
03	B010322050	腳座	CRANKCASE STAND	2		10	B010922000	曲軸油封	CRANKSHAFT OIL SEAL	2	
03-1	BS11214030300	六角螺絲	SCREW	4		11	B011122000	曲軸邊蓋	CRANKSHAFT COVER	1	
03-2	BS32214300	彈簧華司	SPRING WASHER	4		11-1	BS16206016300	內六角螺絲	SCREW	4	
03-3	BS31214201	平面華司	WASHER	4		11-2	BS32206300	彈簧華司	SPRING WASHER	4	
04A	B013022003	柱塞組	PISTON ASSY	3		11-3	BS31206310	平面華司	WASHER	4	
04	B013122151	柱塞桿	PISTON ROD	3		12	BG12091216200	O形環	O-RING	1	
04-1	B013522151	柱塞套擋水墊圈	GASKET	3		13	B011622000	曲軸箱後蓋	REAR COVER	1	
04-2	B013522150	柱塞套透氣墊圈	GASKET	3		13-1	BS16208025300	內六角螺絲	SCREW	8	
04-3	B013222050	陶瓷柱塞套 Ø30	CERAMIC PISTON SLEEVE	3		13-2	BS32208300	彈簧華司	SPRING WASHER	8	
04-9	B015122153	止水墊片	GASKET	3		13-3	BS31208306	平面華司	WASHER	8	
04-10	B013322150	柱塞套固定螺絲	PISTON SET SCREW	3		14	B012201020	油鏡	OIL WINDOW	1	
05	B010522000	柱塞銷	PISTON PIN	3		14-1	BG10234028700	O形環	O-RING	1	
05-1	BS41015010	扣環	BUCKLE RING	6		15	B011823000	排油螺絲	OIL DRAINAGE SCREW	1	
06A	B010622002	連桿組	CONNECTING ROD ASSY	3		15-1	BG10130019	O形環	O-RING	1	
06-1	B014322000	螺絲防鬆片	LOCK WASHER	3		16A	B011901014	加油蓋組	OIL INLET COVER ASSY	1	
06-2	BS31210500	平面華司	WASHER	6		17	B020322050	U迫緊	U-PACKING	3	
06-3	BS11210050500	六角螺絲	SCREW	6		18	B020322051	U迫緊墊圈	U-PACKING SPACER	3	
07	B010822050	曲軸 32	CRANKSHAFT	1		19	B021122050	迫緊上環	PACKING UPPER RING	3	
07-1	B012122000	曲軸鍵	CRANKSHAFT KEY	1		19-1	BG10415045500	O形環	O-RING	3	
08	B010722001	軸承	BEARING	2		19-2	B021022050	防水油封	LOW PRSSURE SEAL	3	
09	B011022000	軸承油封蓋	CRANKSAHFT OIL SEAL COVER	2		20	B020122050	汽缸	MANIFOLD	1	
09-1	BG10900095200	O形環	O-RING	4		20-1	BS50004000	六角塞頭: PT1/8	HEX PLUG PT1/8	1	
09-2	BS16208025300	內六角螺絲	SCREW	8		20-2	BS33212400	安全華司	SAFETY WASHER	8	

零件表PARTS LIST　WH-2075

圖號 NO.	編號 CODE	名　　稱	DESCRIPTION	Q'TY	
20-3	BS16212130300	內六角螺絲	SCREW	8	
21A	B040022050	活門組	VALVE ASSY	6	
21	B040325000	活門帽	VALVE CAGE	6	
21-1	BJ22501000	活門彈簧	VALVE SPRING	6	
21-2	B040125000	活門塞	VALVE PLUG	6	
21-3	B040222050	活門座	VALVE SEAT	6	
21-4	BG10270032	O形環	O-RING	6	
21-5	BG30282032500	背托環	BACK-UP RING	6	
22	BJ22501210	活門輔助彈簧	VALVE SPRING	6	
23	B021322050	活門固定螺絲	VALVE BOLT	6	
23-1	BG10377043040	O形環	O-RING	6	
24	BS50036000	塞頭: PT1-1/2	PLUG PT1-1/2	1	
25	B021722050	進水接頭	INLET CONNECTOR	1	
26	B031218010	壓力錶接頭	PRESSURE GAUGE CONNECTOR	1	
27	B031109000	壓力錶	PRESSURE GAUGE	1	
28	B220300201	過濾器接頭	FILTER CONNECTOR	1	
***29A**	**B060022051**	**安全弁(SUS316)**	**SAFETY VALVE ASSY(SUS316)**	**1**	
30	B023518000	安全弁接頭	SAFETY VALVE CONNECTOR	1	
ACC.	B150101001	吸水管組 3/4"*9尺	INLET HOSE ASSY 3/4"*9 FT	1	
ACC.	B150103001	吸水管組 1-1/4"*10尺	INLET HOSE ASSY 1-1/4"*10 FT	1	
ACC.	B150903110	過濾網	FILTER	1	
ACC.	B150603110	過濾網申目	FILTER SOCKET	1	
ACC.	BP21823350	皮帶輪 10B3*35*10	PULLEY 10B3*35*10	1	
ACC.	BS11112032121	皮帶輪螺絲	PULLEY SET BOLT	1	
*29A零件表及展開圖請參閱第4頁。			*29A parts list & diagram please refer to page 4.		
			2026.10V		

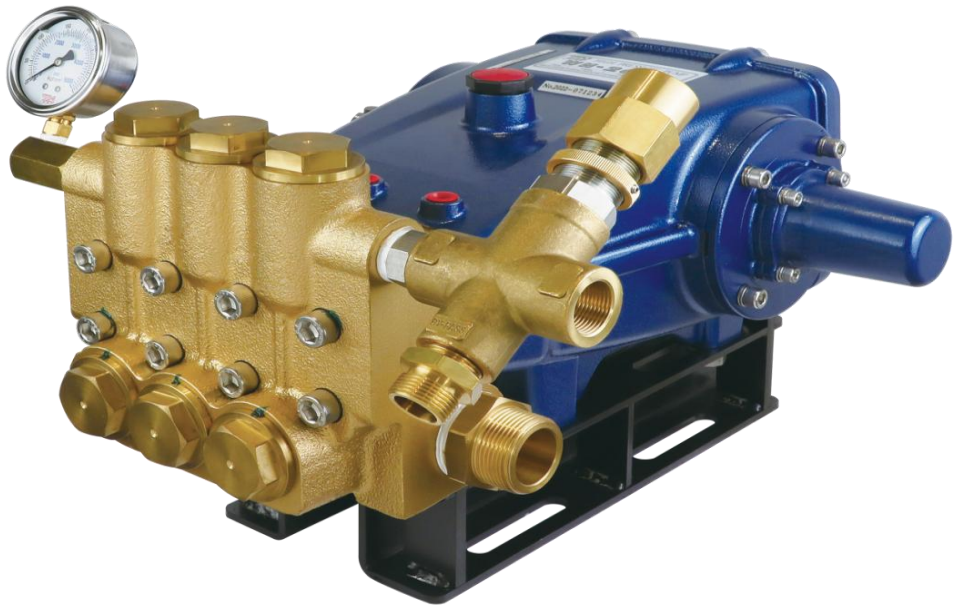

零件表PARTS LIST　安全弁 B060022051 / SAFETY VALVE ASSEMBLY

圖號 NO.	編號 CODE	名　　稱	DESCRIPTION	Q'TY	
01	B060122051	安全弁本體	SAFETY VALVE BODY	1	
02	B060922050	壓力閥座	PRESSURE VALVE SEAT	1	
02-1	BG10170022040	O形環	O-RING	1	
03	B061022050	壓力閥桿	PRESSURE VALVE ROD	1	
03-1	BG10150020040	O形環	O-RING	2	
03-2	BG30156019900	背托環	BACK-UP RING	2	
03-3	BG30169019900	閥桿耐磨環	VALVE ROD WEAR RING	1	
04	B061222050	壓力閥套	PRESSURE VALVE SLEEVE	1	
05	B062322050	安全弁接頭	SAFETY VALVE COUPLING	1	
05-1	BG10250030300	O形環	O-RING	1	
06	B310115120	鋼珠	SST BALL	1	
07	B061422050	彈簧下座	SPRING SEAT (LOWER)	1	
08	BJ42201000	調壓彈簧	PRESSURE REGULATING SPRING	1	
09	B061322050	彈簧上座	SPRING SEAT (UPPER)	1	
10	B062522050	固定環	SET RING	1	
10-1	BS17204006300	無頭內六角螺絲	HEADLESS HEX SOCKET HEAD SCREW	2	
11	B062422050	調壓螺帽	PRESSURE REGULATING KNOB	1	
			2026.10V		

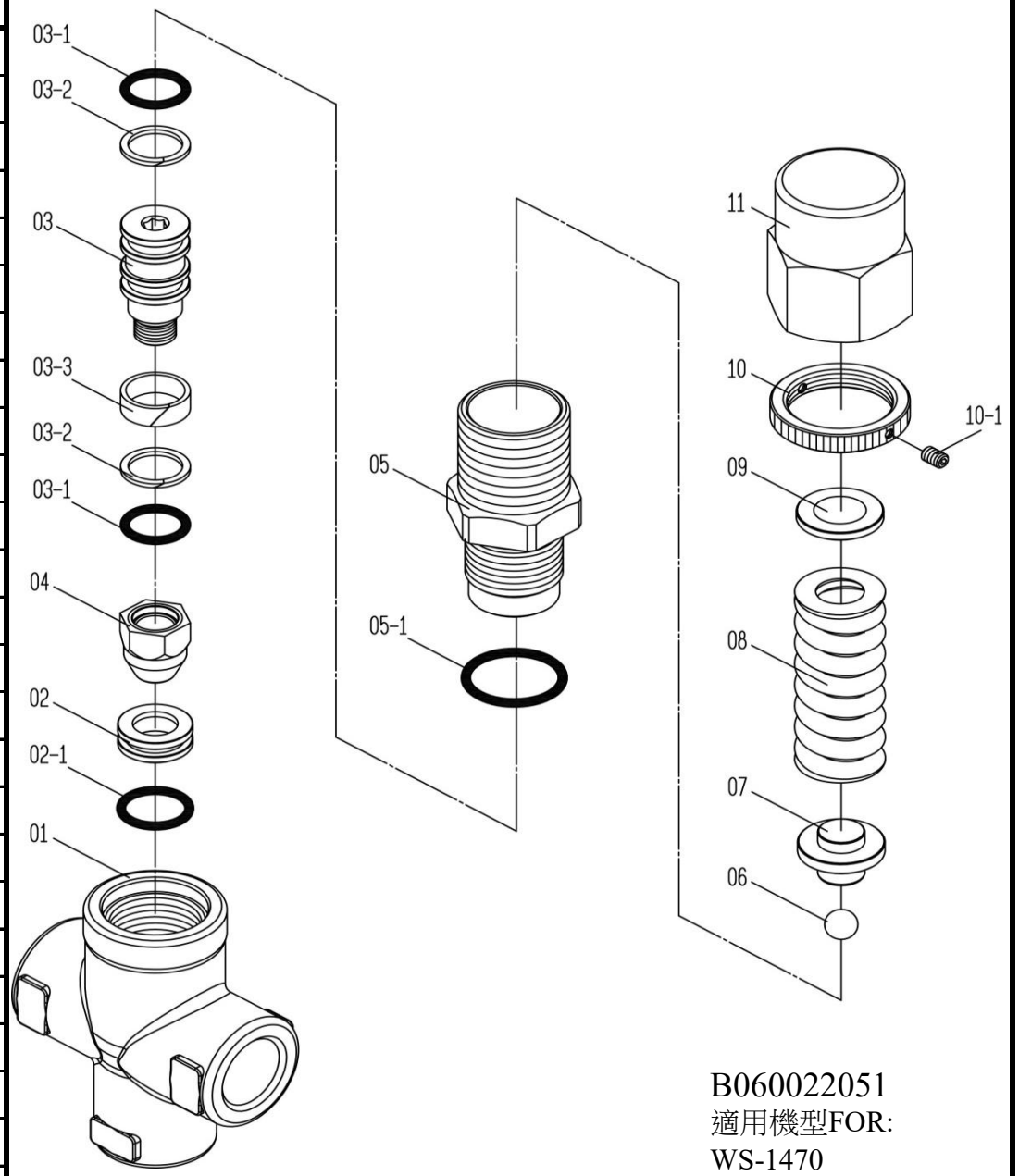

B060022051
適用機型FOR:
WS-1470
WS-1770
WH-2075